P100001428 REF_8KW_HFHD_PSU

Assembly instructions

- P1: Index & overview
- P2: preparation of module PW100001427
- P3: preparation of module PW200001428
- P4: installation of modules - centerline
- P5: installation of modules - outsides
- P6: preparation of steel enclosure + installation of isolation
- P7: fan installation
- P8: chassis completion
- P9: finished view

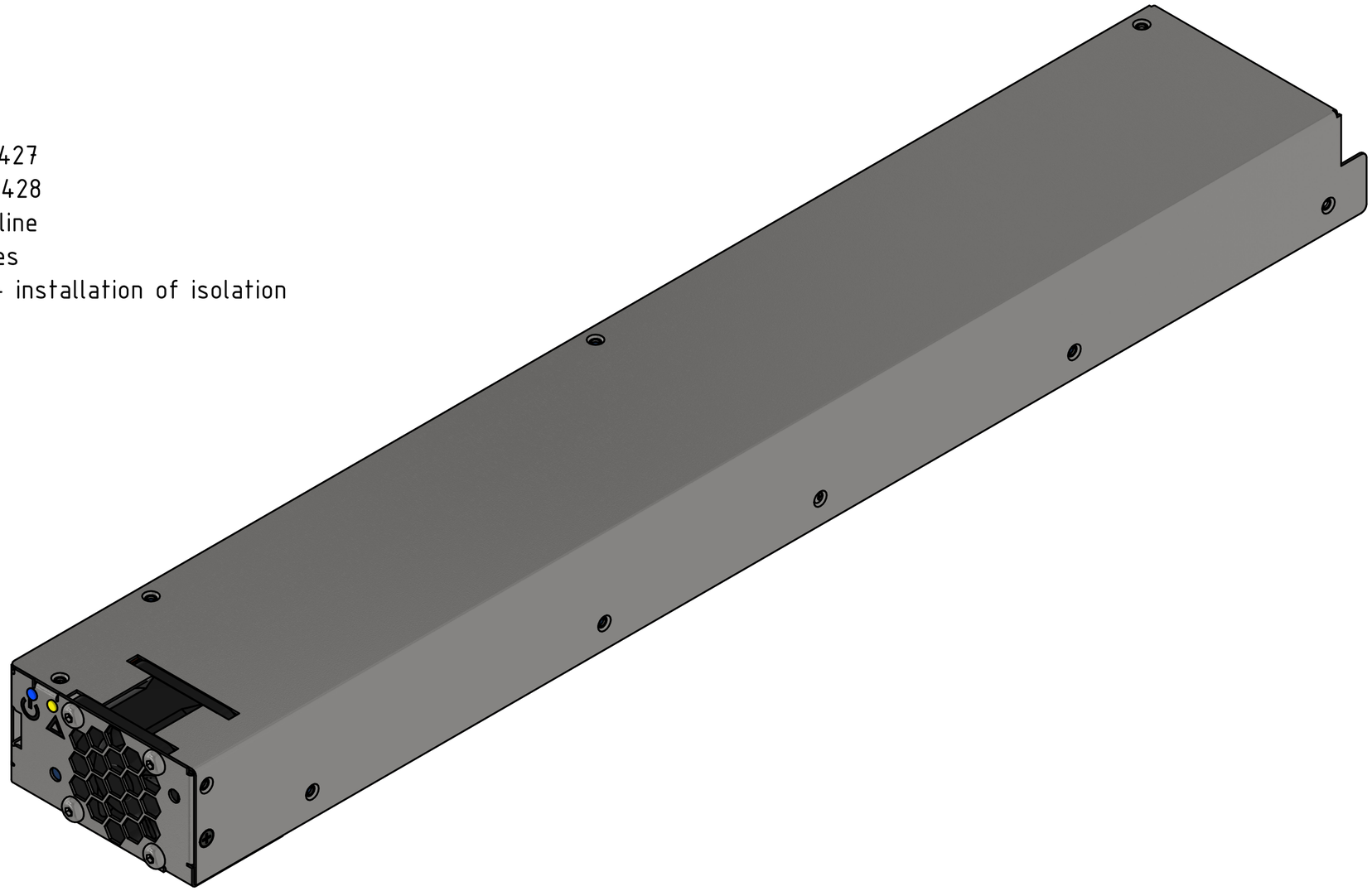

					Datum	Name
				Gezeich	19.02.2025	Wernegger
				Kontroll		
				Norm		
Status	Änderungen	Datum	Name			

Index

P100001428 REF_8KW_HFHD_PSU

final assembly

1

A2

PARTS LIST			
ITEM	QTY	PART NUMBER	DESCRIPTION
1	1	PW100001427	
2	1	TFPW100001427	Bergquist BPLMSHD-0.010-00-1212
3	1	HT800001427	73x27x5mm machined aluminium heatsink

Assembling instructions:

1. Apply pressure from heatssink (3) to TIM (2) to keep it in place on PCB (1).
2. Use hot air stream (oven) set to 160°C.
3. Expose to target temperature for 6 minutes.
   Allow to rest & cool down.

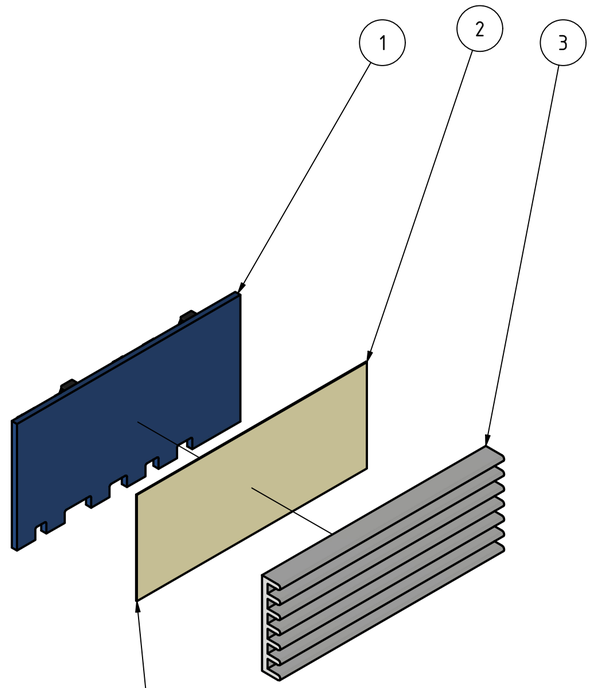

Thermal interface material is slightly larger than the aluminium heatsink.
Align with soldermask opening, centering the heatsink on the TIM (edges should be exposed evenly).

TFPW100001427 detail

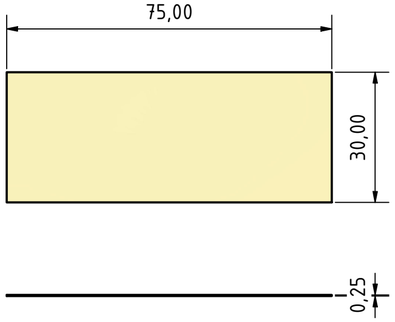

					Datum	Name
				Gezeich	19.02.2025	Wernegger
				Kontroll		
				Norm		
Status	Änderungen	Datum	Name			

Preparation of PW100001427 LLC

P100001428 REF_8KW_HFHD_PSU

final assembly

2

A2

PARTS LIST			
ITEM	QTY	PART NUMBER	DESCRIPTION
1	1	ICE 8032.0205.024	Bias transformer
2	1	PW200001428	PFC module
3	1	TFPW200001428	Bergquist BPLMSHD-0.010-00-1212
4	1	HT700001426	67x27x6mm machined aluminium heatsink
5	1	HT600001427	Flat heatsink

Assembling instructions:

1. Apply pressure from heatsink (4 + 5) to TIM (3) to keep it in place on PCB (2).
2. Use hot air stream (oven) set to 160°C.
3. Expose to target temperature for 6 minutes.
   Allow to rest & cool down.
4. Solder BIAS transformer (1) as last step.

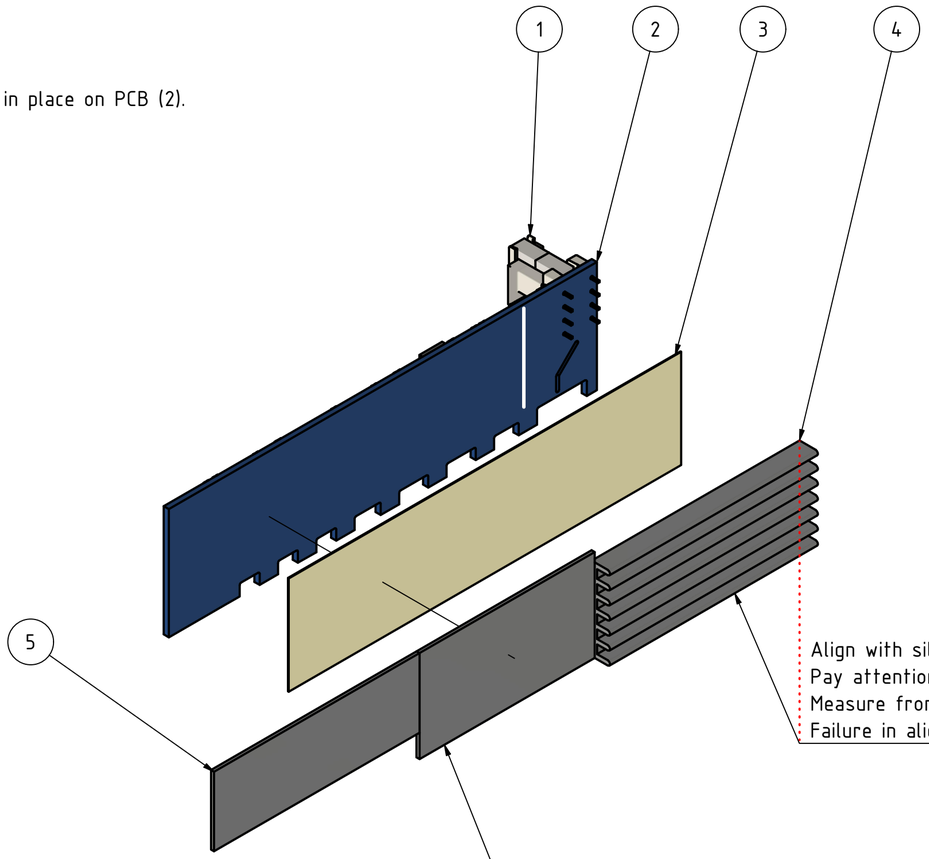

TFPW100001427 detail

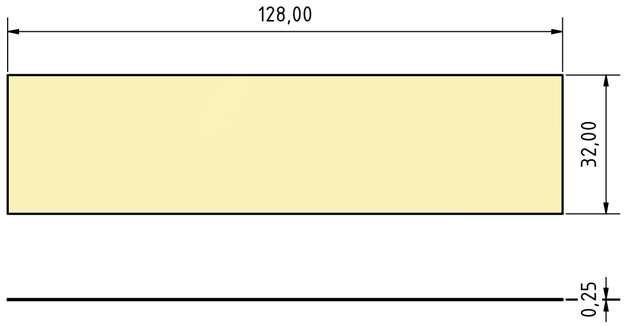

					Datum	Name
				Gezeich	19.02.2025	Wernegger
				Kontroll		
				Norm		
Status	Änderungen	Datum	Name			

Preparation of PW200001428 PFC

P100001428 REF_8KW_HFHD_PSU

final assembly

3

A2

PARTS LIST			
ITEM	QTY	PART NUMBER	DESCRIPTION
1	1	M100001428	mainboard
2	1	PW100001427	power module
3	1	MG600003070 / ICE 8052.1102.052	current transformer
4	1	PW200001428	power module
5	1	TF200001427	main transformer Lm
6	1	TF100001428	main transfomer Lm + Lr
7	1	CD100001427	control module
8	1	HT200001428	flat heatsink/busbar

Assembly instructions:

1. insert & align main transformers as first step.
2. main transformer height below PCB = 2mm uniform
3. solder transformer legs in THT holes and clip excess length.

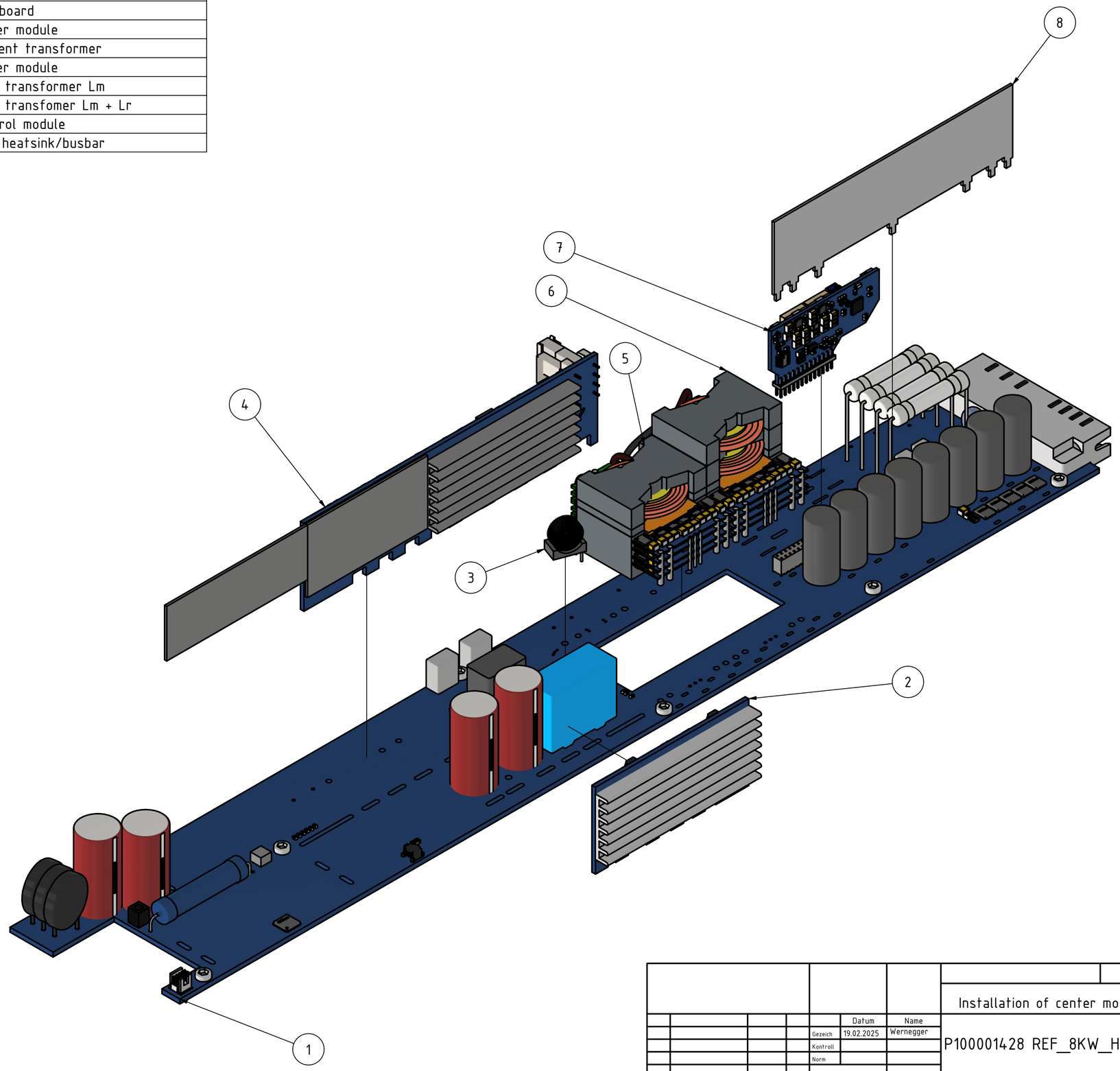

					Datum	Name
				Gezeich	19.02.2025	Wernegger
				Kontroll		
				Norm		
Status	Änderungen	Datum	Name			

Installation of center modules

P100001428 REF_8KW_HFHD_PSU

final assembly

4

A2

PARTS LIST			
ITEM	QTY	PART NUMBER	DESCRIPTION
1	2	MG100001427/MPR12589-5-01	common mode chokes
2	2	HT100001426	flat heatsink
3	1	HT500001427	machined aluminium heatsink
4	4	M2.5x5	metric machine screw, countersunk head
5	2	MG200001427 / ICE 8024.2901.044	PFC chokes
6	1	MG400003070 / ICE 8024.2501.029	buffer choke
7	1	HT300001429	flat heatsink with cutouts
8	1	HT400001429	flat heatsink with cutouts
9	3	871-B43659A5108M057	1000uF caps soldered to C100002800/ designators C15/16/17

IMPORTANT NOTICE:
HT 300001429 + HT400001429 need the cutout fins bent and soldered to main transformer.
Do this after THT installation on M100001428.
See below picture.

Assembly instructions for (7) & (8):

1. pre-bend cutout fins of (7) & (8) so that fins of (8) will pass through (7)
2. solder to main transformer legs
3. solder to main board as last step.

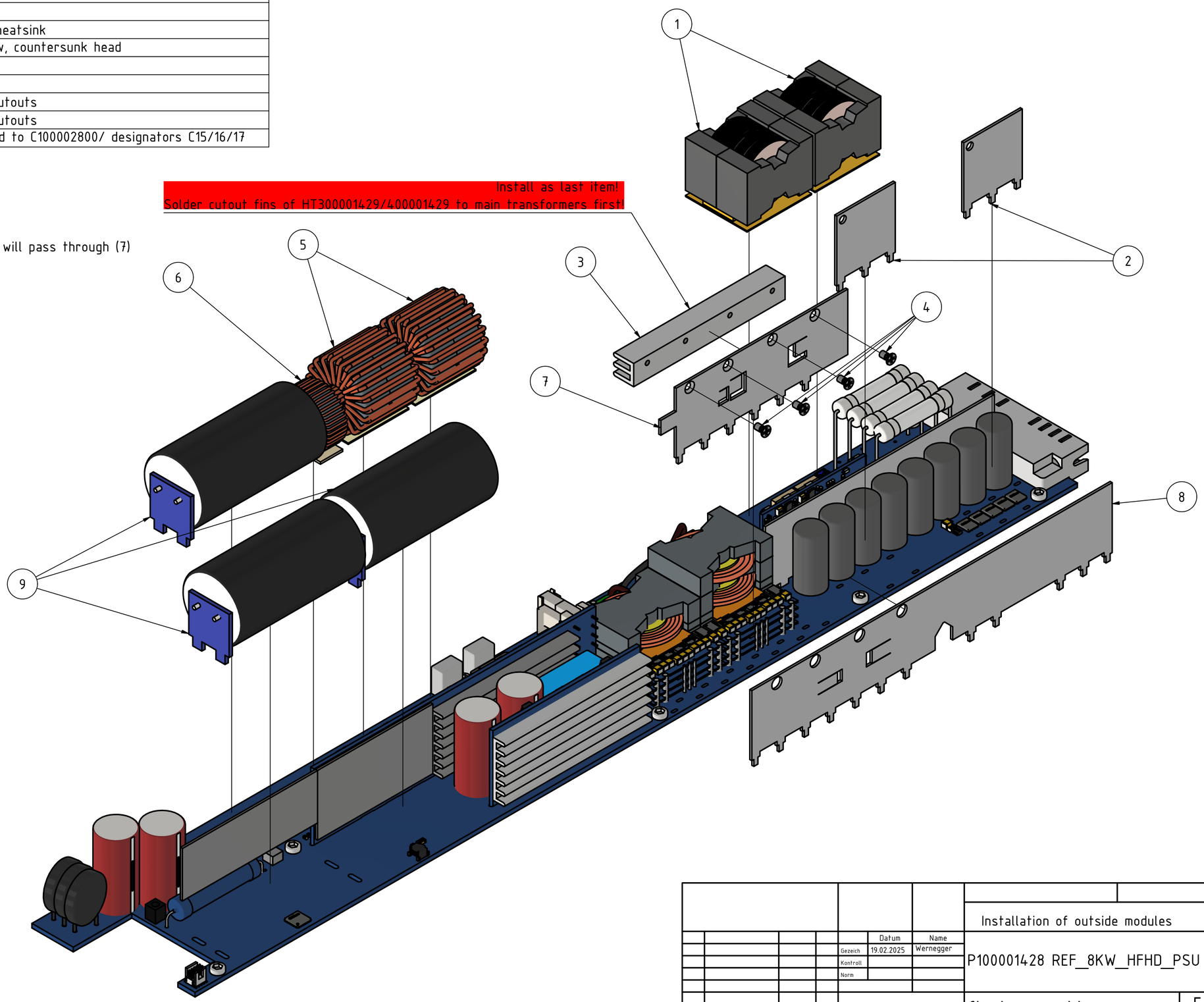

							Installation of outside modules
					Datum	Name	
				Gezeich	19.02.2025	Wernegger	P100001428 REF_8KW_HFHD_PSU
				Kontroll			
				Norm			
							final assembly 5 A2
Status	Änderungen	Datum	Name				

General instructions:
Sand inside of steel chassis as depicted.

Gluing instructions:
Use spray adhesive **RS 136-8536** as per manufacturers directions.

Sand inside of HO100001428 with 600 grit sandpaper.
Use respiratory protection and clean up thoroughly.

After sanding the chassis glue IS1/2/3/400001428 to the inside of the enclosure.
Blue side facing inwards, copper side towards the steel chassis.

Sand inside of MP100001427 with 600 grit sandpaper.
Use respiratory protection and clean up thoroughly.

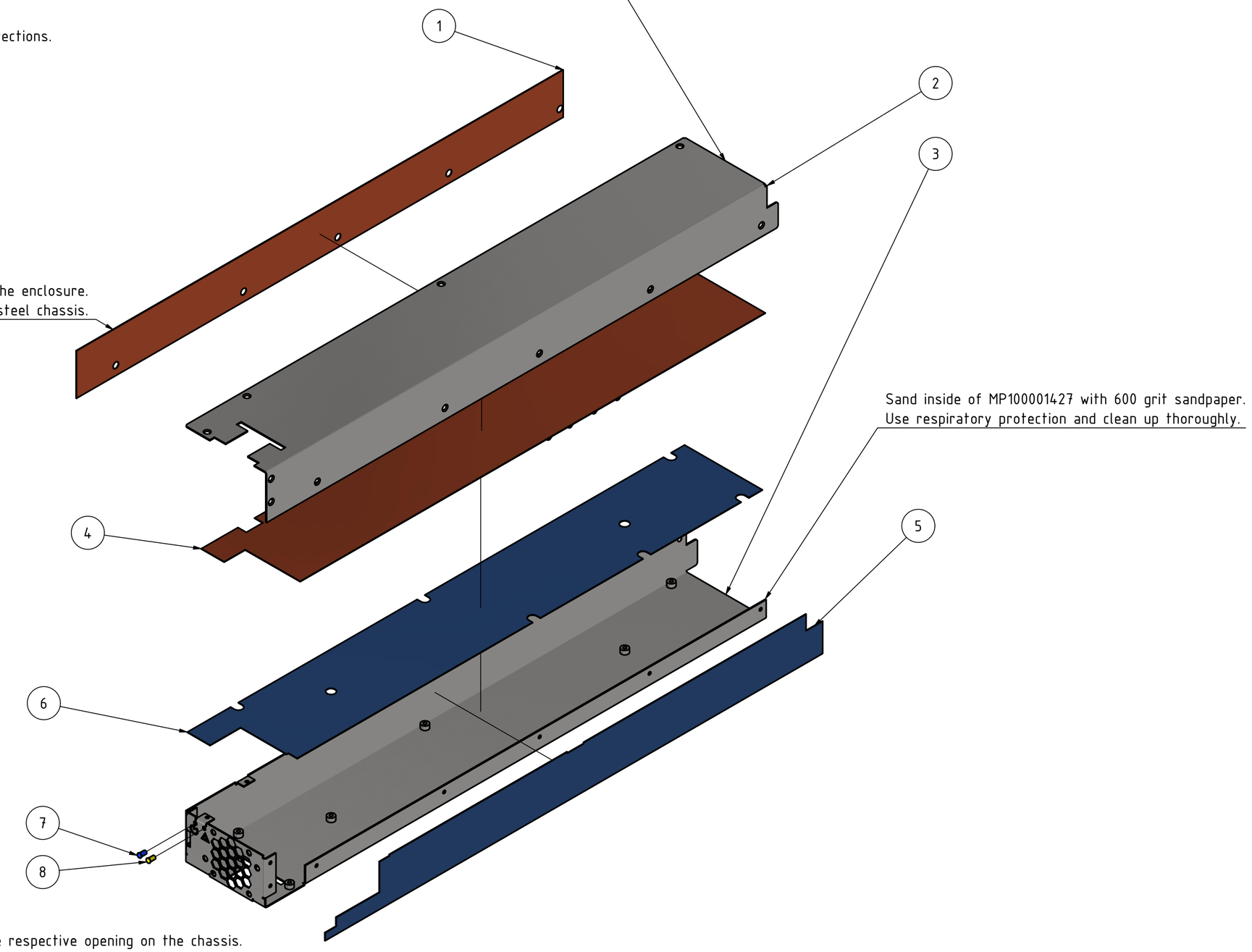

PARTS LIST			
ITEM	QTY	PART NUMBER	DESCRIPTION
1	1	IS400001428	isolation side panel
2	1	HO100001428	steel chassis cover
3	1	MP100001427	steel chassis base
4	1	IS100001428	isolation top panel
5	1	IS200001428	isolation side panel
6	1	IS300001428	isolation bottom panel
7	1		LED POWER
8	1		LED HAZARD

Note: Status LEDs are not fully pictured.
Slide LED body + flexible light conductor through the respective opening on the chassis.
Plug ON LED + adapter to designator D6 on M100001428.
Plug Hazard LED + adapter to designator D7 on M100001428.

Status	Änderungen	Datum	Name

	Datum	Name
Gezeich	19.02.2025	Wernegger
Kontroll		
Norm		

Preparation of chassis + isolation install

P100001428 REF_8KW_HFHD_PSU

final assembly

6

A2

~410mm

Elongate stock fan wiring harness by using 79758-1060 MOLEX pre-crimped wires.
Plug pre-crimped ends to 51021-0500 MOLEX receptacle
Wrap solder joints individually and entirely in thermoretractive tube.

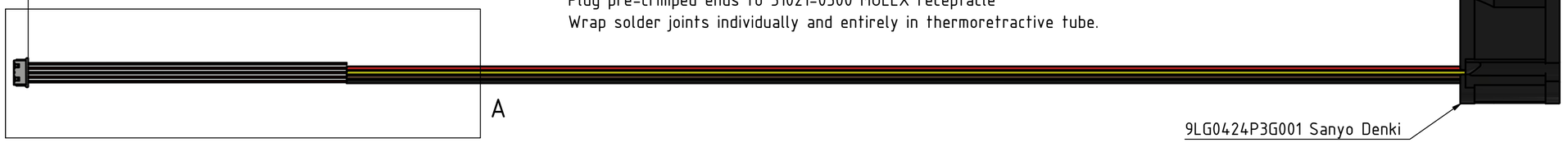

9LG0424P3G001 Sanyo Denki

Combine stock fan wires and elongates as pictured.
Note orientation of the receptacle.

A (2 : 1)

Join fifth wire to black fan wire.

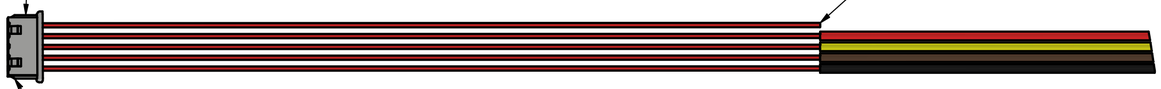

Plug to X2 (FAN) on module CD100001427.
Note orientation.

Cut M4 threads in mounting holes facing towards the chassis outside.

Wiring harness not pictured in CAD model.
See picture of how to route the finished fan wire.

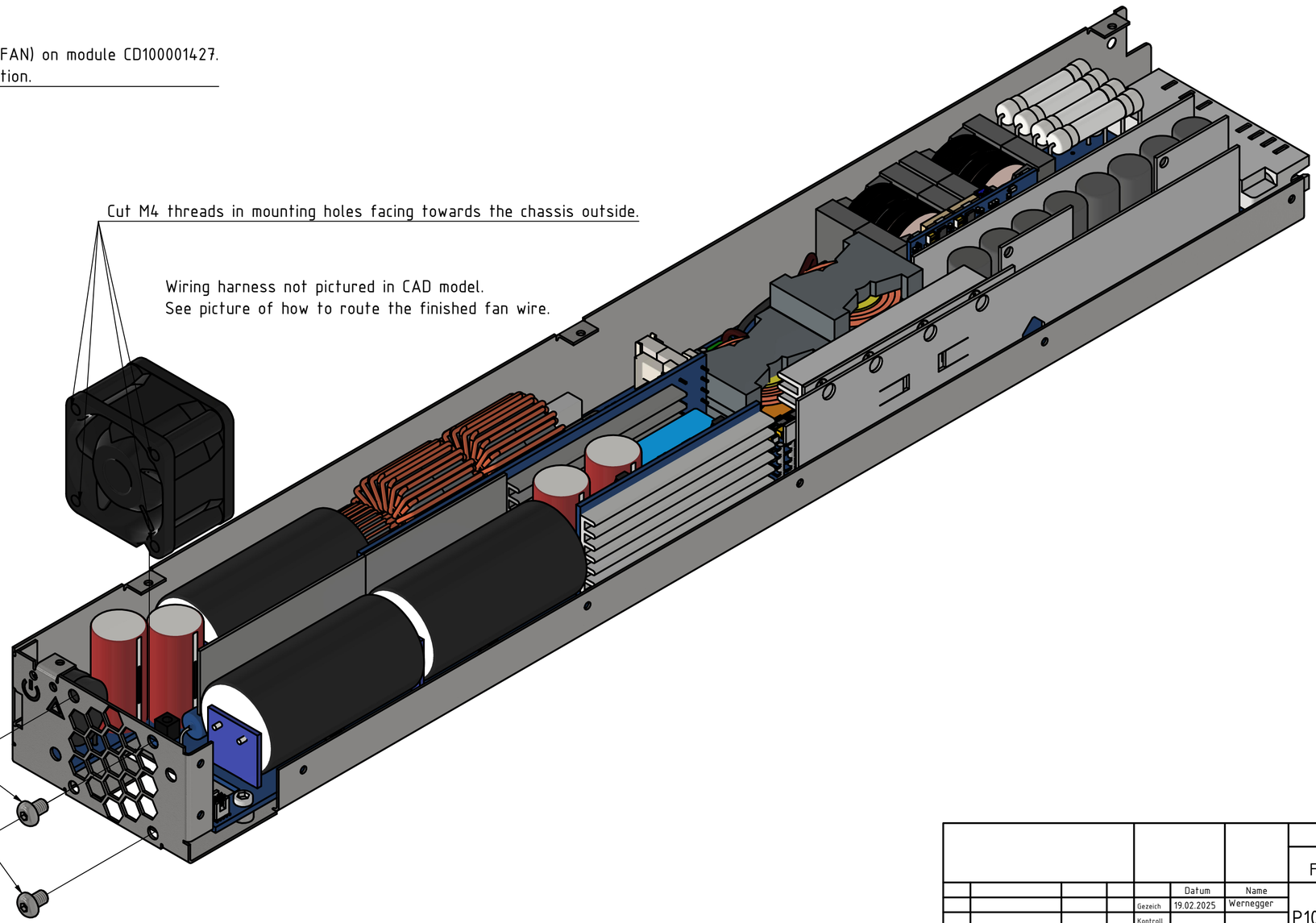

M4x8mm button head screws

					Datum	Name
				Gezeich	19.02.2025	Wernegger
				Kontroll		
				Norm		
Status	Änderungen	Datum	Name			

Fan preparation + install

P100001428 REF_8KW_HFHD_PSU

final assembly

7

A2

PARTS LIST			
ITEM	QTY	PART NUMBER	DESCRIPTION
1	12	M3x4 (or shorter)- 8.8	Countersunk flat head screws (shown only once)

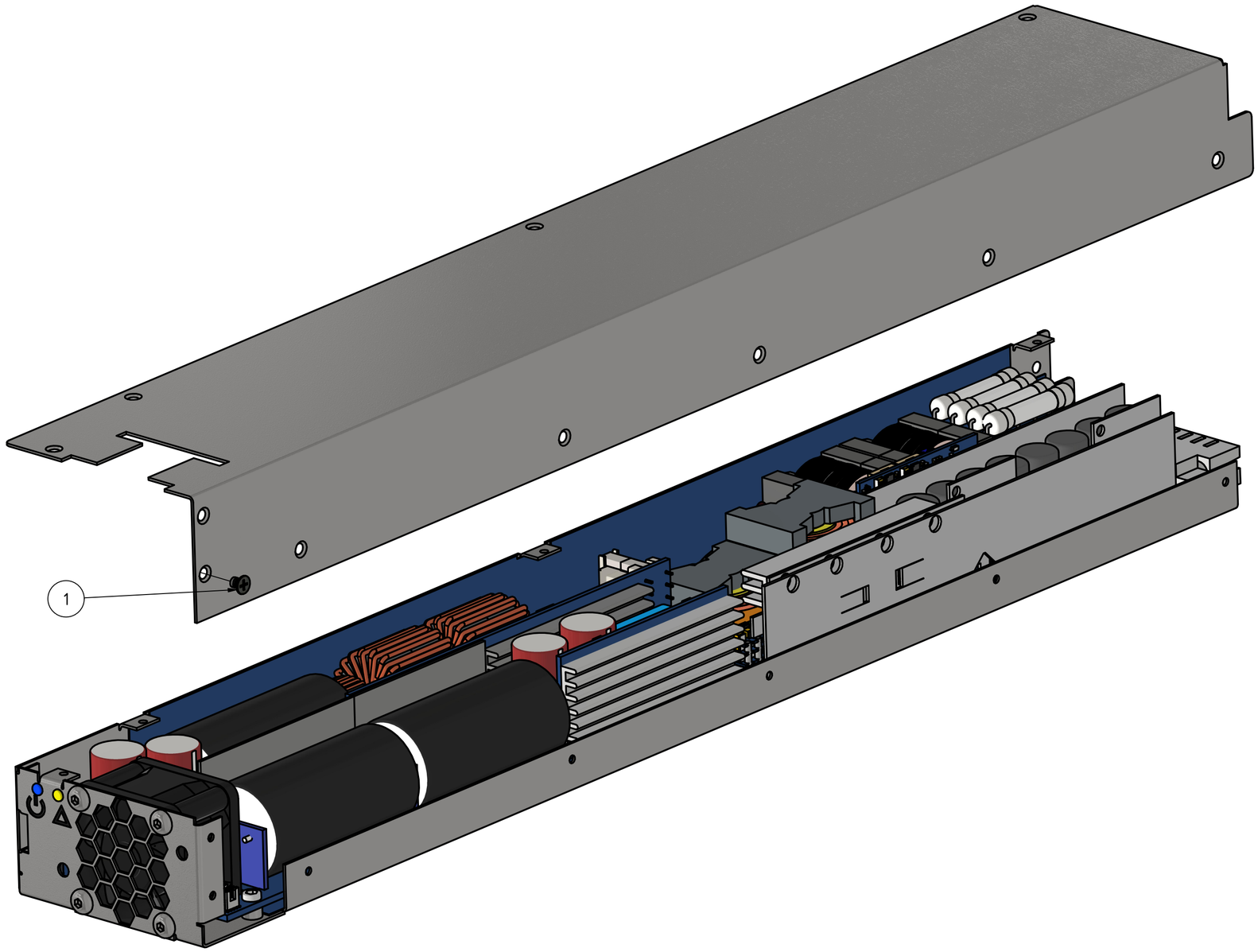

					Datum	Name
				Gezeich	19.02.2025	Wernegger
				Kontroll		
				Norm		
Status	Änderungen	Datum	Name			

Enclosuring

P100001428 REF_8KW_HFHD_PSU

final assembly

8

A2

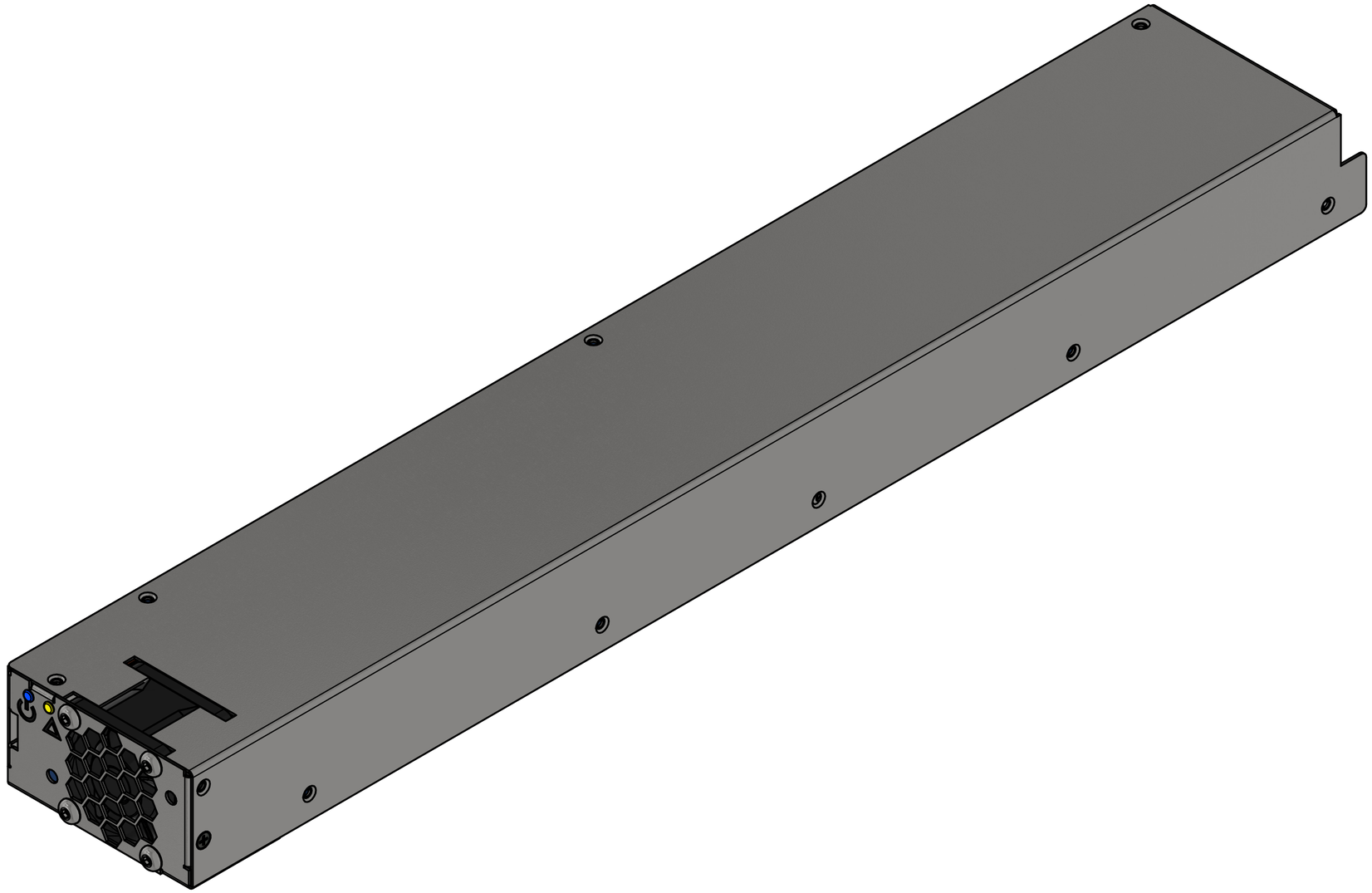

							finishing view
					Datum	Name	
				Gezeich	19.02.2025	Wernegger	P100001428 REF_8KW_HFHD_PSU
				Kontroll			
				Norm			
							final assembly 9
							A2
Status	Änderungen	Datum	Name				